SOFAS & SECTIONALS COLLECTION

MALIBU

AMERICAN
LEATHER®

MALIBU

Standard Features:

- Advanced unidirectional suspension system
- Premium high-density, high-resiliency foam seats encased in down
- Quick-ship delivery
- Lifetime warranty on frame & suspension
- Down covered arms
- Adjustable back cushions
- Double needle top stitch using thick thread
- Metal legs

Options:

- Wood legs available in Acorn, Espresso or Walnut finish

Please use actual leather, fabric and Ultrasuede® swatches when specifying furniture as the colors shown may vary due to the printing process.

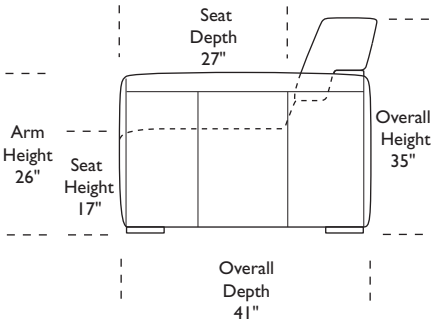

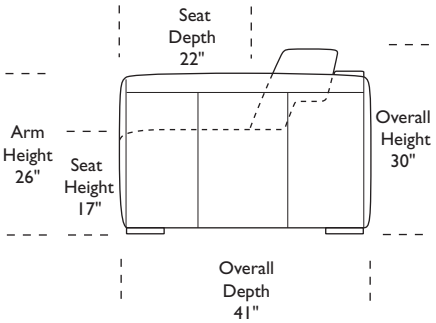

*Note: arm height for this frame is measured at the highest point of the arm.

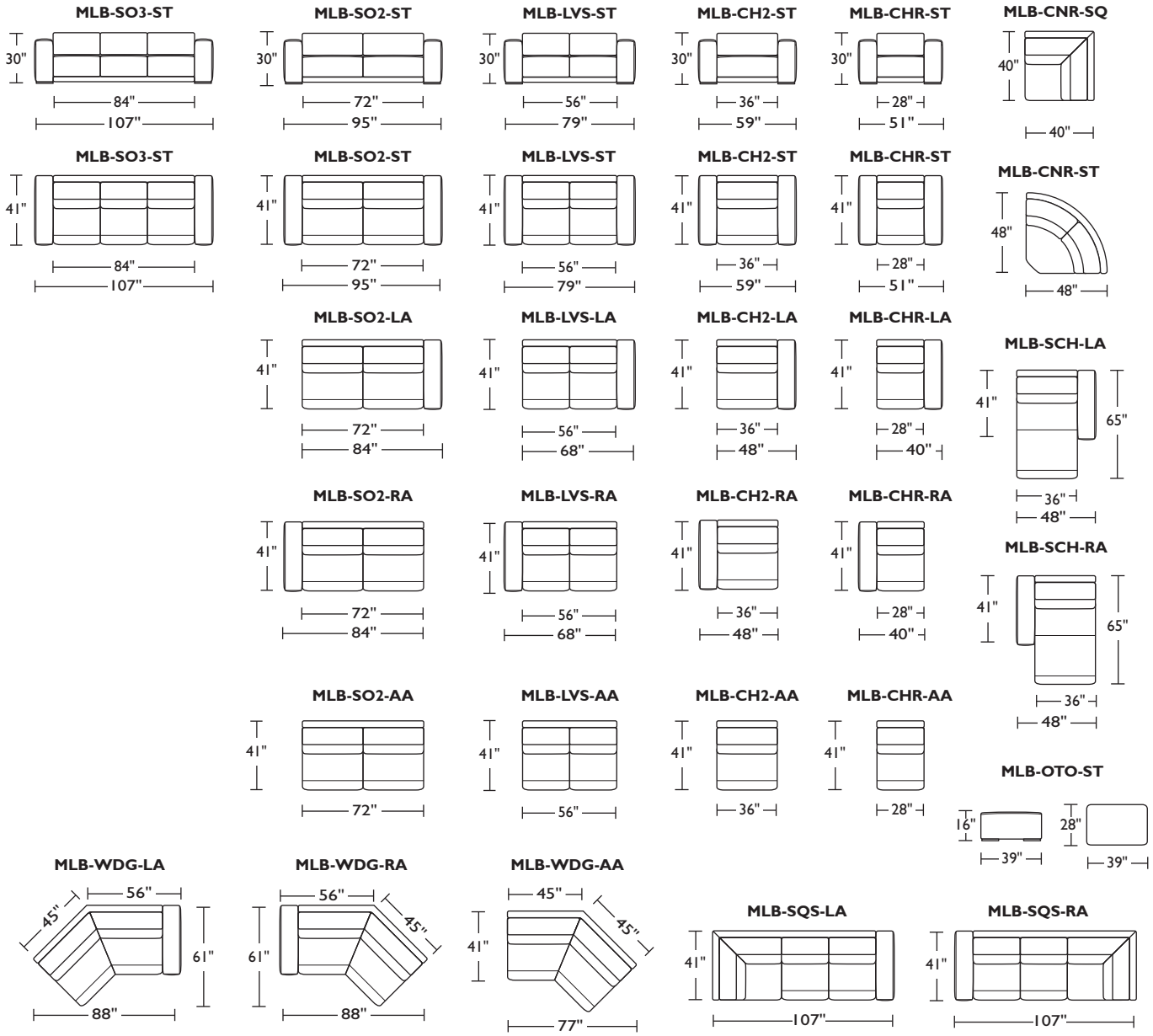

Scale: 1/8 inch = 1 foot
All dimensions are approximate and subject to change.
Specify components from the sitting position.

V.10.20.14